# 3D-PRINTED WRIST-DRIVEN ORTHOSIS FOR INDIVIDUALS WITH SPINAL CORD INJURY

Portnova, A.A.[1], Mukherjee, G.[1], Peters, K.M.[1], Yamane, A.[2], Steele, K.M.[1]

Departments of [1]Mechanical Engineering and [2]Rehabilitation Medicine, University of Washington

## INTRODUCTION

Affordable 3D-printers have created a new toolset that may help improve the fabrication and accessibility of a variety of commercially available orthoses designed to help improve function for individuals with limited mobility. A wrist-driven wrist-hand orthosis (WDWHO) assists in opening and closing of the hand by utilizing wrist flexion and extension, consequently enhancing performance of activities of daily living for individuals with complete and incomplete spinal cord injury (SCI) at the 5$^{th}$ or 6$^{th}$ cervical (C-5 or C-6) levels. Current fabrication methods have been described as time-consuming and laborious, in addition to providing poor comfort, function, and aesthetics for the user (House et al., 1976). These devices can also be expensive due to long fabrication and fitting times. The goal of this research was to pursue an iterative design process with the input of orthotists and users to improve the fabrication, cost, and function of WDWHOs.

## METHOD

Computer-aided design software (SolidWorks) was used to model the WDWHO. The devices were fabricated on a MakerBot Replicator 3D-printer, using an affordable bioplastic, polylactic acid (PLA). To improve the design, we completed two phases of testing with orthotists and users. During Phase I, two groups of Prosthetics & Orthotics students were recruited to assemble and provide feedback on the WDWHO. These students, who had recently been trained in the fabrication of traditional WDWHOs, assembled the 3D-printed device with a manual describing the assembly process. After fabrication, participants rated the function, aesthetics, and comfort of the device, completed a survey regarding their experience, and made suggestions for improvement. After each session, the feedback was used to modify the design and fabrication methods. In Phase II testing, participants with a C-5 or C-6 level SCI and prior experience using a WDWHO were recruited for user testing. During the first visit, each participant's upper-extremity function was evaluated and measurements were taken to size the device. Future visits will assess device comfort and function.

## RESULTS

The final model of the 3D-printed WDWHO took an average of 5 hours of hands-off printing time and 1.5 hours of hands-on assembly. Total material costs were $10, in comparison to $350 for current commercially available WDWHO. We used padding for comfort and Velcro and elastic straps to secure the device to the user's hand. The modified design improved fit at the forearm, allowed for a three-jaw chuck grasp, and increased the range of motion (ROM) at the thumb by 20º by engaging both the fingers and the thumb in motion during wrist flexion and extension (Fig. 1). During Phase I, the device received average grades of 6.3, 6.6, 6.3, and 9.7 on its function, aesthetics, comfort, and fabrication speed, respectively (1 = slow/poor, 10 = fast/great). Each part of the device was designed for multiple sizes (XS, S, M, L, and XL). From our initial testing with SCI users, these interchangeable sizes have been important as all individuals have required different sizes for each part of the device.

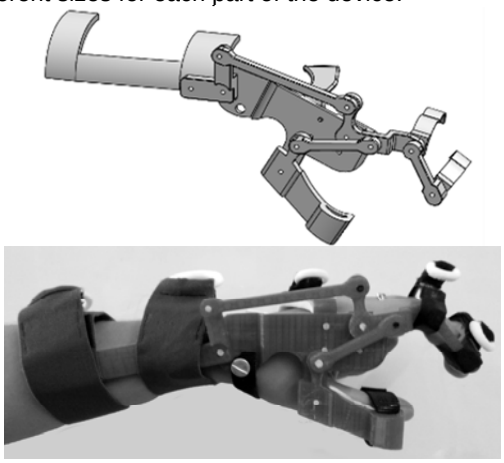

Figure 1. Final design of a 3D-printed WDWHO.

## DISCUSSION

Feedback from Phase I participants has improved the function, comfort, aesthetics, and assembly time of the WDWHO to ensure suitability for user testing. Comments made in regards to 3D-printing orthotic devices suggested a "promising method for an inexpensive off-the-shelf orthosis." The increased ROM in the thumb permits a larger grasp, which future testing with SCI users will evaluate for functional improvements. Lastly, initial results from Phase II have confirmed the importance of various sizes for individual components on the device to create a custom and individualized fit. Further testing will evaluate the functional improvements for individuals with SCI and incorporate their comments for future design changes.

## CONCLUSION

3D-printing orthoses has the potential to improve WDWHOs and other orthoses due to low material cost, enhanced aesthetics, and easier customizability.

## CLINICAL APPLICATIONS

This project aims to improve the design of a traditional WDWHO to reduce complexity and fabrication time, increase availability, and improve appeal to the users.

# 3D-PRINTED WRIST-DRIVEN ORTHOSIS FOR INDIVIDUALS WITH SPINAL CORD INJURY

Portnova, A.A.[1], Mukherjee, G.[1], Peters, K.M.[1], Yamane, A.[2], Steele, K.M.[1]
Departments of [1]Mechanical Engineering and [2]Rehabilitation Medicine, University of Washington

**REFERENCES**

House, J., Gwathmey, F., Lundsgaard, D. J Hand Surg 1(2), 152-159, 1976.